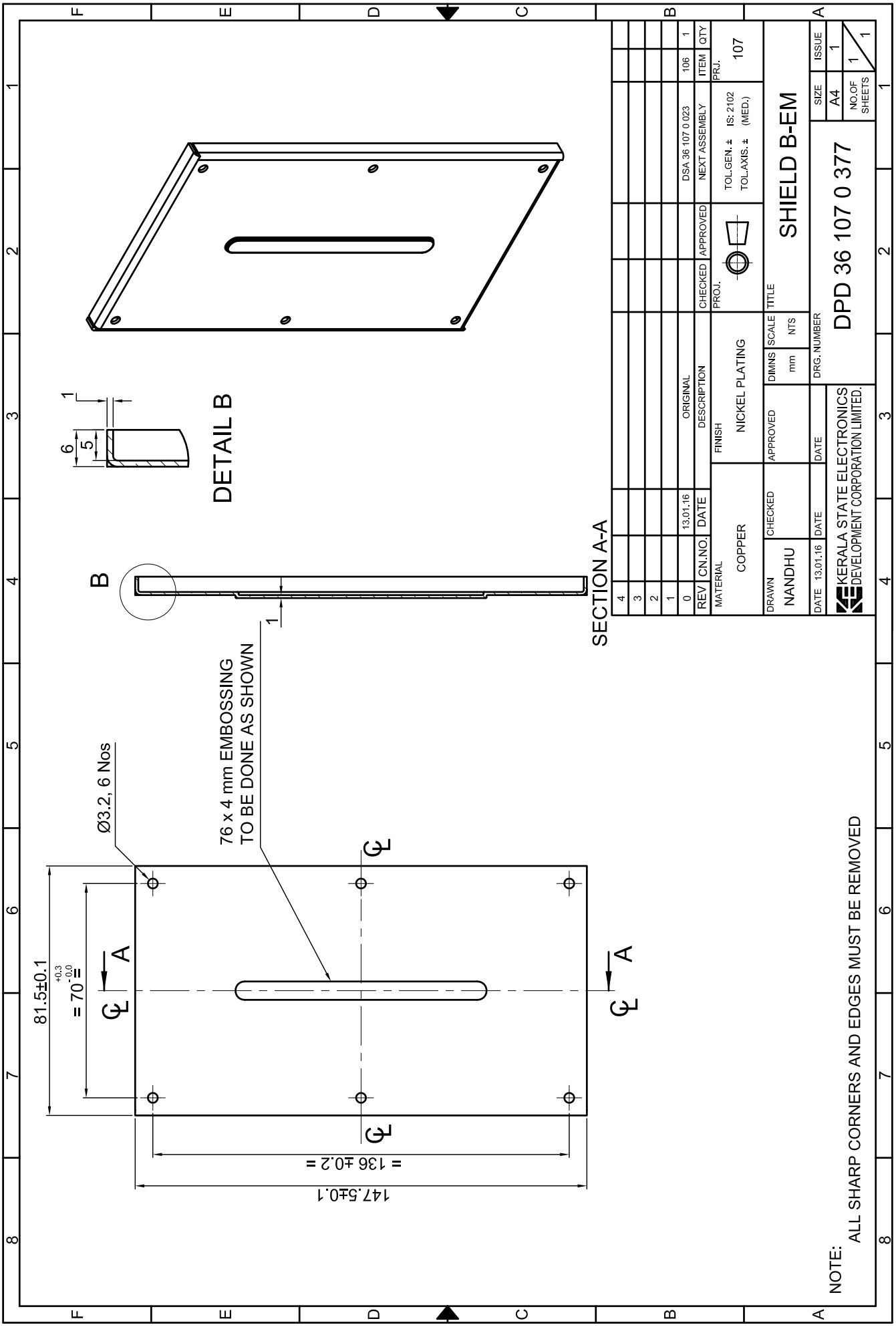
DETAIL B
SECTION A-A
B
A
A
76 x 4 mm EMBOSSING
TO BE DONE AS SHOWN
Ø3.2, 6 Nos
81.5±0.1
= 70 +0.3 -0.0 =
= 136 ±0.2 =
147.5±0.1
NOTE:
ALL SHARP CORNERS AND EDGES MUST BE REMOVED
SHIELD B-EM
DPD 36 107 0 377
KERALA STATE ELECTRONICS
DEVELOPMENT CORPORATION LIMITED.
COPPER
NICKEL PLATING
NANDHU
13.01.16
DSA 36 107 0 023
107
106
A4
NTS
mm
IS: 2102
(MED.)

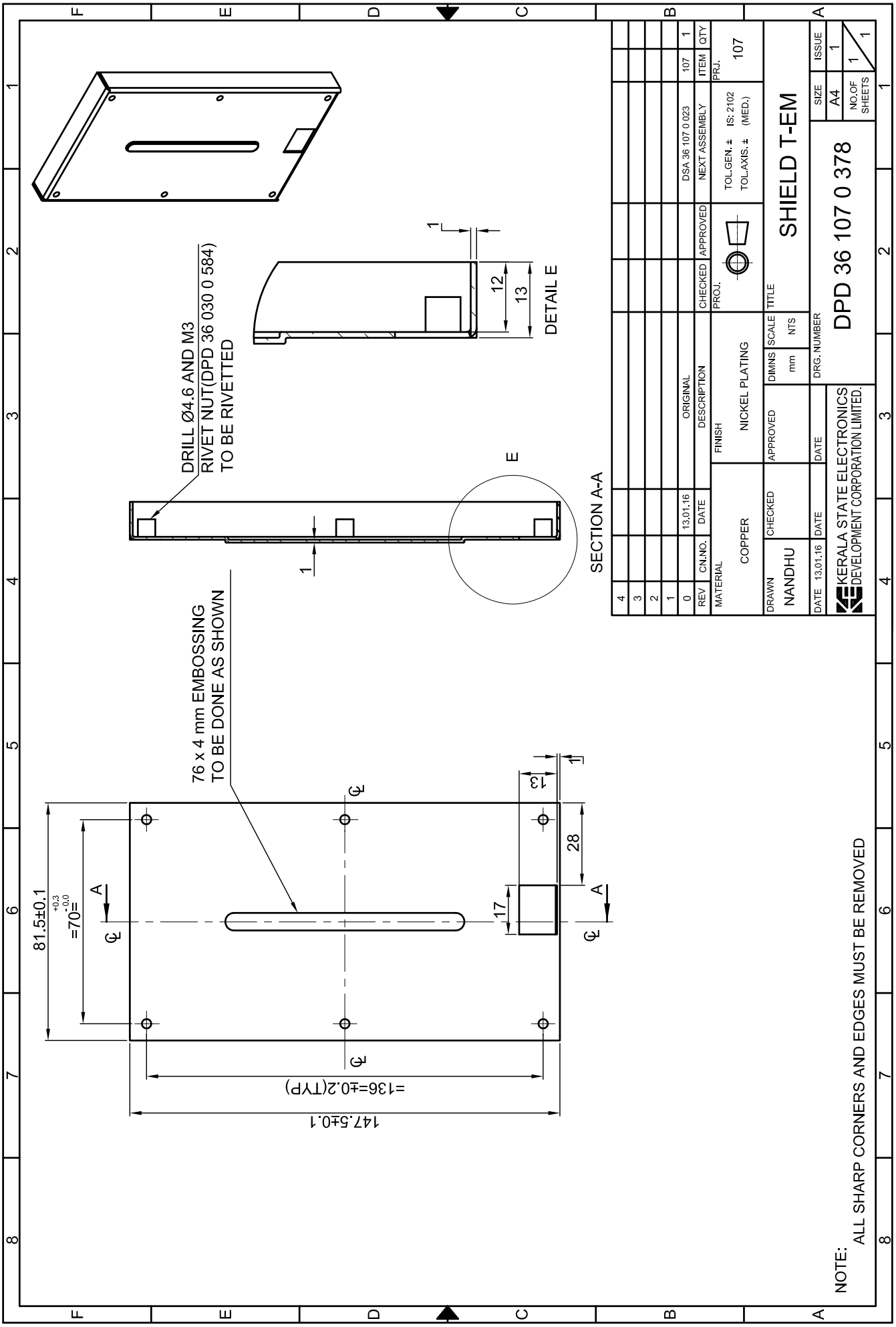
DRILL Ø4.6 AND M3
RIVET NUT(DPD 36 030 0 584)
TO BE RIVETTED
DETAIL E
SECTION A-A
76 x 4 mm EMBOSSING
TO BE DONE AS SHOWN
81.5±0.1
=70=
=136=±0.2(TYP)
147.5±0.1
NOTE:
ALL SHARP CORNERS AND EDGES MUST BE REMOVED
SHIELD T-EM
DPD 36 107 0 378
KERALA STATE ELECTRONICS
DEVELOPMENT CORPORATION LIMITED.
COPPER
NICKEL PLATING
NANDHU
13.01.16
DSA 36 107 0 023
107
A4
1

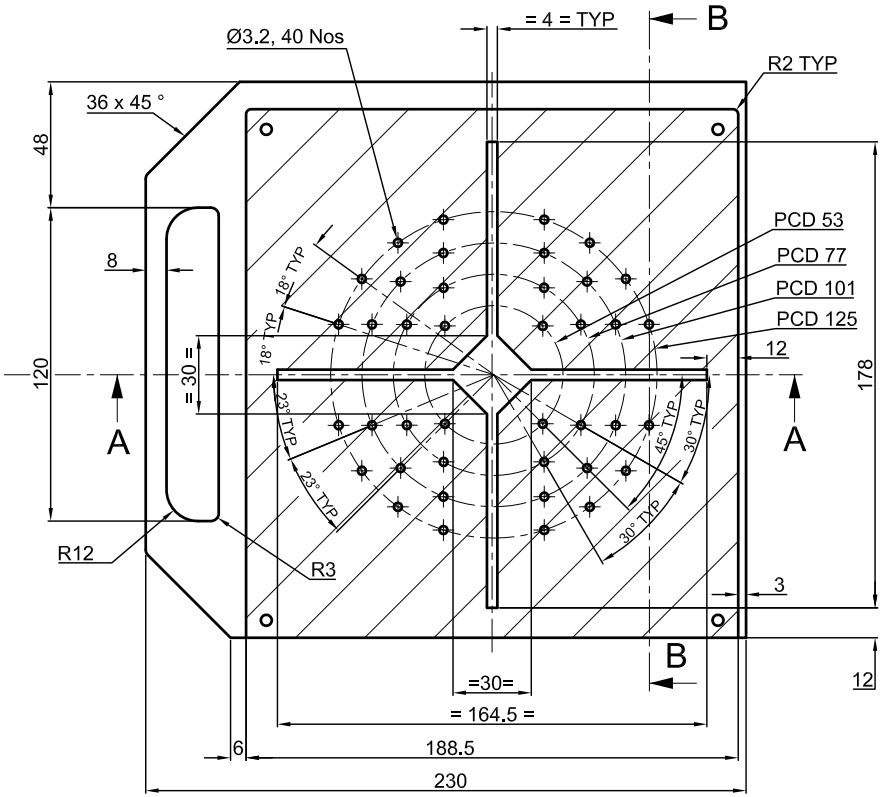

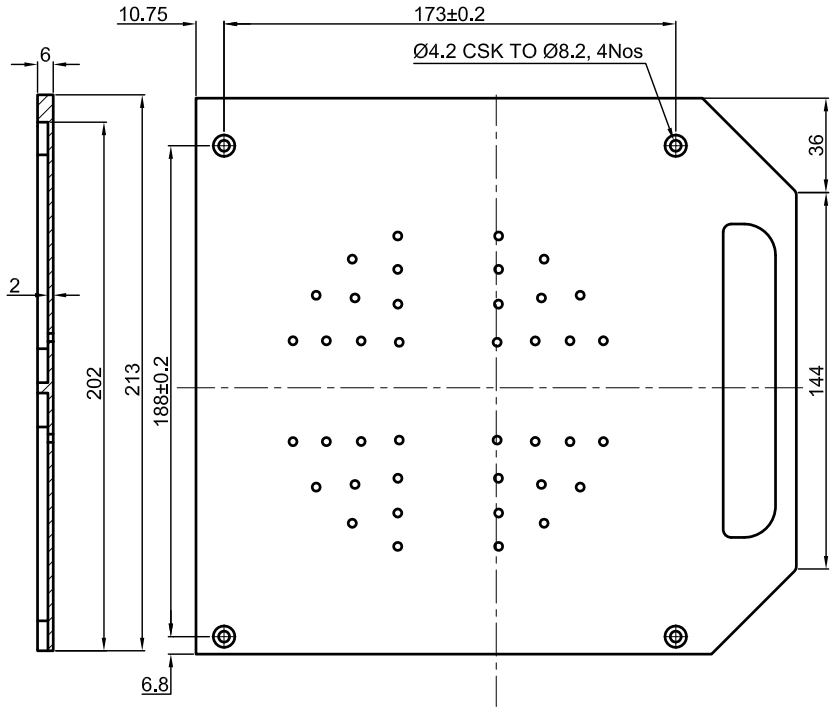

SECTION B-B

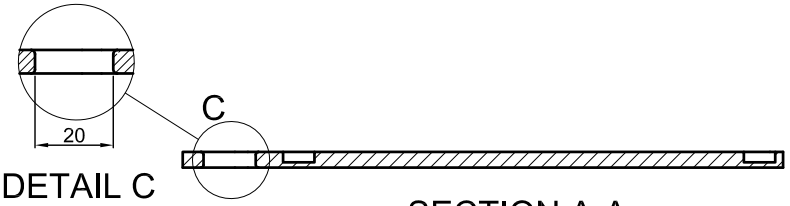

DETAIL C

SECTION A-A

NOTE:

1. HATCHED AREA TO BE MASKED BEFORE POWDER COATING
2. POWDER COATING D.A GREY IS:5 SHADE No:632 WITH STRUCTURE FINSH AFTER CC COATING
3. ALL SHARP CORNERS AND EDGES MUST BE REMOVED

REV	CN.NO.	DATE	DESCRIPTION	CHECKED	APPROVED	NEXT ASSEMBLY	ITEM	QTY
4								
3								
2								
1								
0		14.01.16	ORIGINAL			DSA 36 107 0 053	32	1

MATERIAL	FINISH	PROJ.		PRJ.
ALUMINIUM ALLOY, HE30	SEE NOTE		TOL.GEN. ± IS: 2102 TOL.AXIS. ± (MED.)	107

DRAWN	CHECKED	APPROVED	DIMNS	SCALE	TITLE
NANDHU			mm	NTS	LEFT SIDE COVER - EM
DATE 14.01.16	DATE	DATE	DRG. NUMBER		SIZE A4 / ISSUE 1
KERALA STATE ELECTRONICS DEVELOPMENT CORPORATION LIMITED.			DPD 36 107 0 367		NO.OF SHEETS 1 / 1

RESTRICTED

RESTRICTED

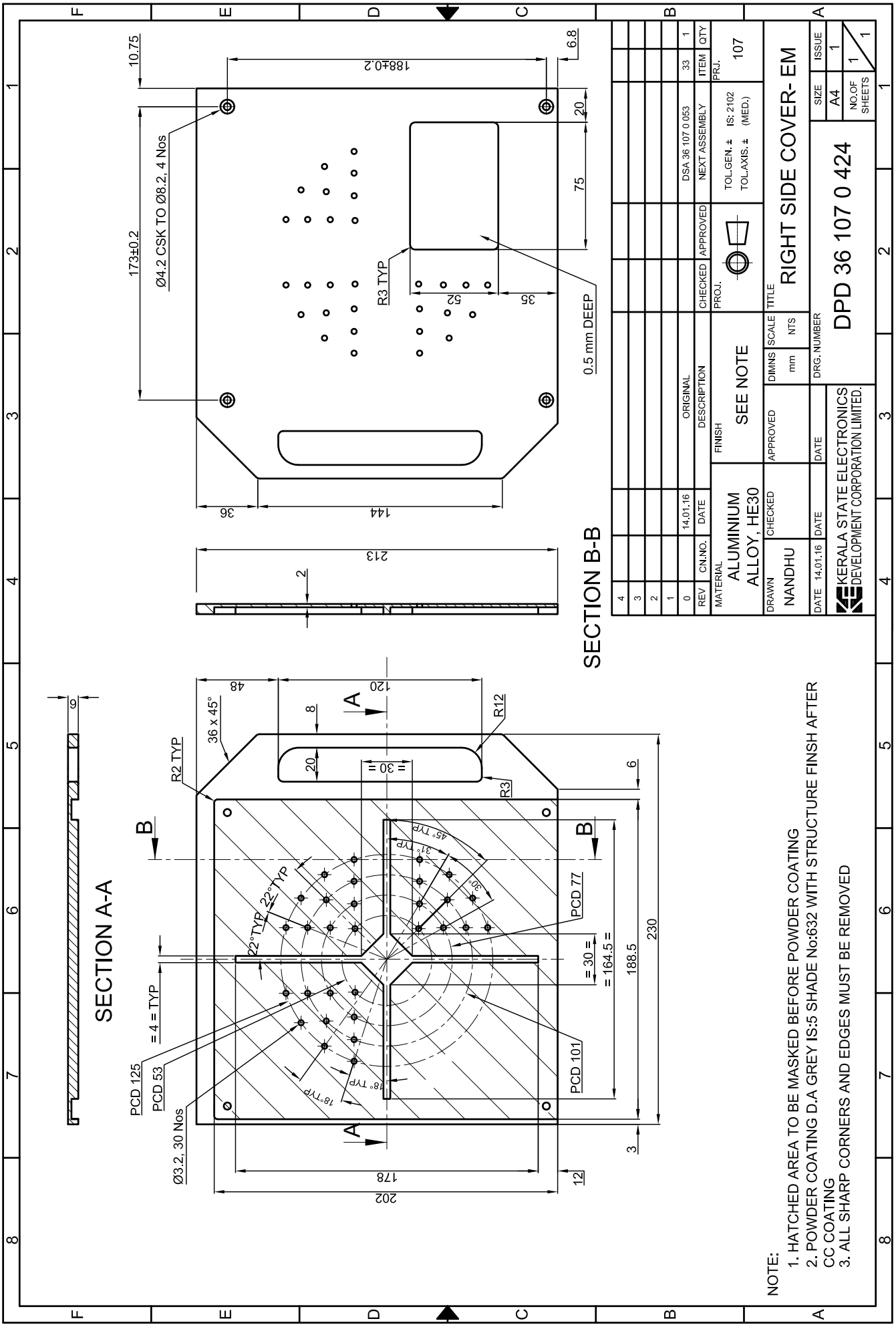
SECTION A-A
SECTION B-B
Ø4.2 CSK TO Ø8.2, 4 Nos
173±0.2
188±0.2
10.75
6.8
20
75
R3 TYP
52
35
0.5 mm DEEP
36
144
213
2
9
48
120
8
36 x 45°
R2 TYP
R12
R3
20
= 30 =
= 4 = TYP
PCD 125
PCD 53
Ø3.2, 30 Nos
22°TYP
18°TYP
45°TYP
37°TYP
30°
PCD 77
PCD 101
= 164.5 =
188.5
230
6
3
12
178
202
NOTE:
1. HATCHED AREA TO BE MASKED BEFORE POWDER COATING
2. POWDER COATING D.A GREY IS:5 SHADE No:632 WITH STRUCTURE FINSH AFTER CC COATING
3. ALL SHARP CORNERS AND EDGES MUST BE REMOVED
REV CN.NO. DATE DESCRIPTION CHECKED APPROVED NEXT ASSEMBLY ITEM QTY
0 14.01.16 ORIGINAL DSA 36 107 0 053 33 1
PRJ. 107
TOL.GEN. ± IS: 2102
TOL.AXIS. ± (MED.)
PROJ.
MATERIAL ALUMINIUM ALLOY, HE30
FINISH SEE NOTE
DRAWN NANDHU DATE 14.01.16
CHECKED DATE
APPROVED DATE
DIMNS mm
SCALE NTS
TITLE RIGHT SIDE COVER- EM
DRG. NUMBER DPD 36 107 0 424
SIZE A4
ISSUE 1
NO.OF SHEETS 1
KERALA STATE ELECTRONICS DEVELOPMENT CORPORATION LIMITED.

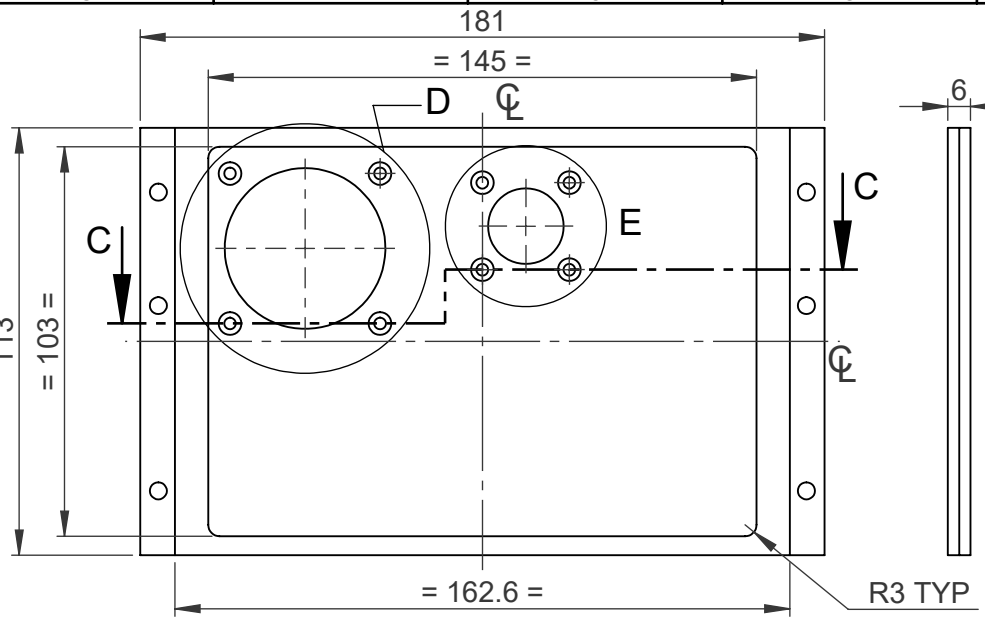

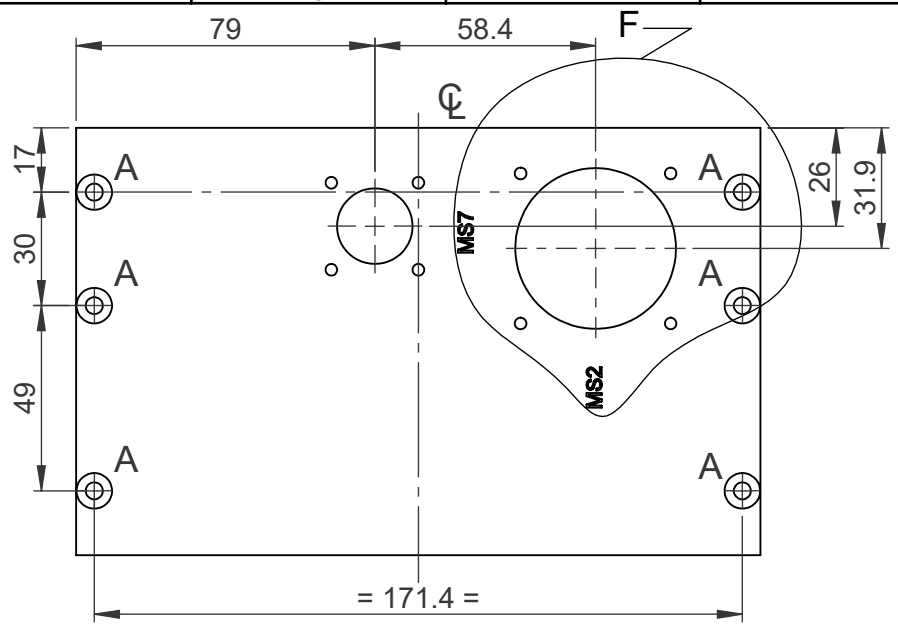

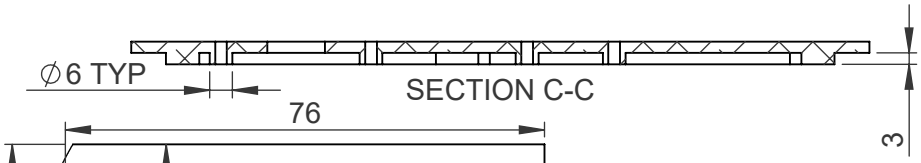

NOTE:-

1. ENGRAVING TEXT HEIGHT 3.5x0.5↧ AND FILLED WITH BLACK PAINT

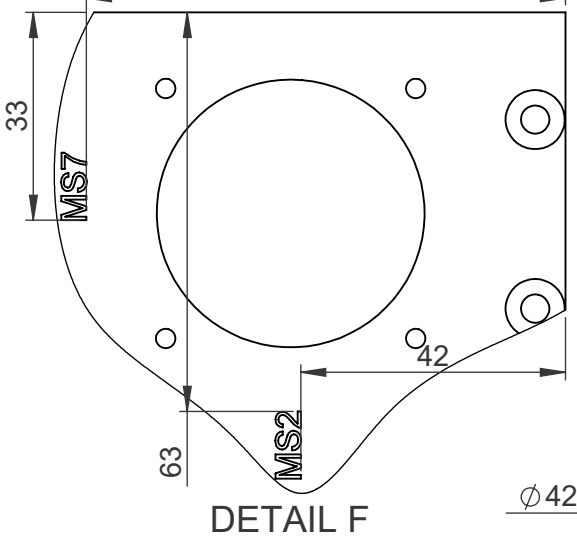

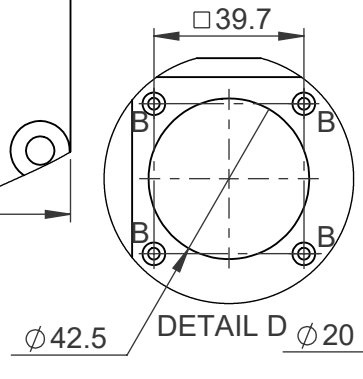

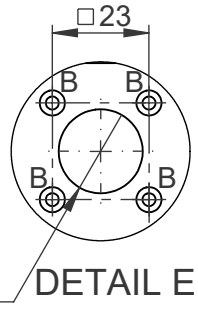

SL.No	REF	DESCRIPTION	QTY
1	A	DRILL ∅4.5 ∨ ∅9.4	6
2	B	DRILL ∅3.1 AND M3 HELICOIL TAP	8

REV	CN.NO	DATE	DESCRIPTION	CHECKED	APPROVED	NEXT ASSEMBLY	ITEM	QTY
4								
3								
2								
1								
0		18.12.25	ORIGINAL			-	-	1

MATERIAL: ALUMINIUM ALLOY 6082-T6 / HE30	FINISH: YELLOW CC COATING	PROJ.	TOL.GEN. ± TOL.AXIS. ± IS: 2102 (MED.)	PRJ. 107	
DRAWN: LALU	CHECKED	APPROVED	DIMNS: mm	SCALE: NTS	TITLE: BOTTOM PLATE-EM
DATE 18.12.25	DATE	DATE	DRG. NUMBER: DPD 36 107 0 664	SIZE: A4	ISSUE: 1
KERALA STATE ELECTRONICS DEVELOPMENT CORPORATION LIMITED				NO.OF SHEETS: 1 / 1	

ITEM No.	DESCRIPTION	PARTNUMBER	QTY
1	BOTTOM PLATE-EM	DPD 36 107 0 664	1
2	FRONT PLATE-EM	DPD 36 107 0 665	1
3	REAR PLATE-EM	DPD 36 107 0 666	1
4	TOP PLATE-EM	DPD 36 107 0 667	1
5	M4x0.7x2D HELICOIL INSERT, SS	FIS 04 008 0 101	12
6	M4x10 PHILIPS CSK HD SCREW,SS	FSS 04 010 2 001	12

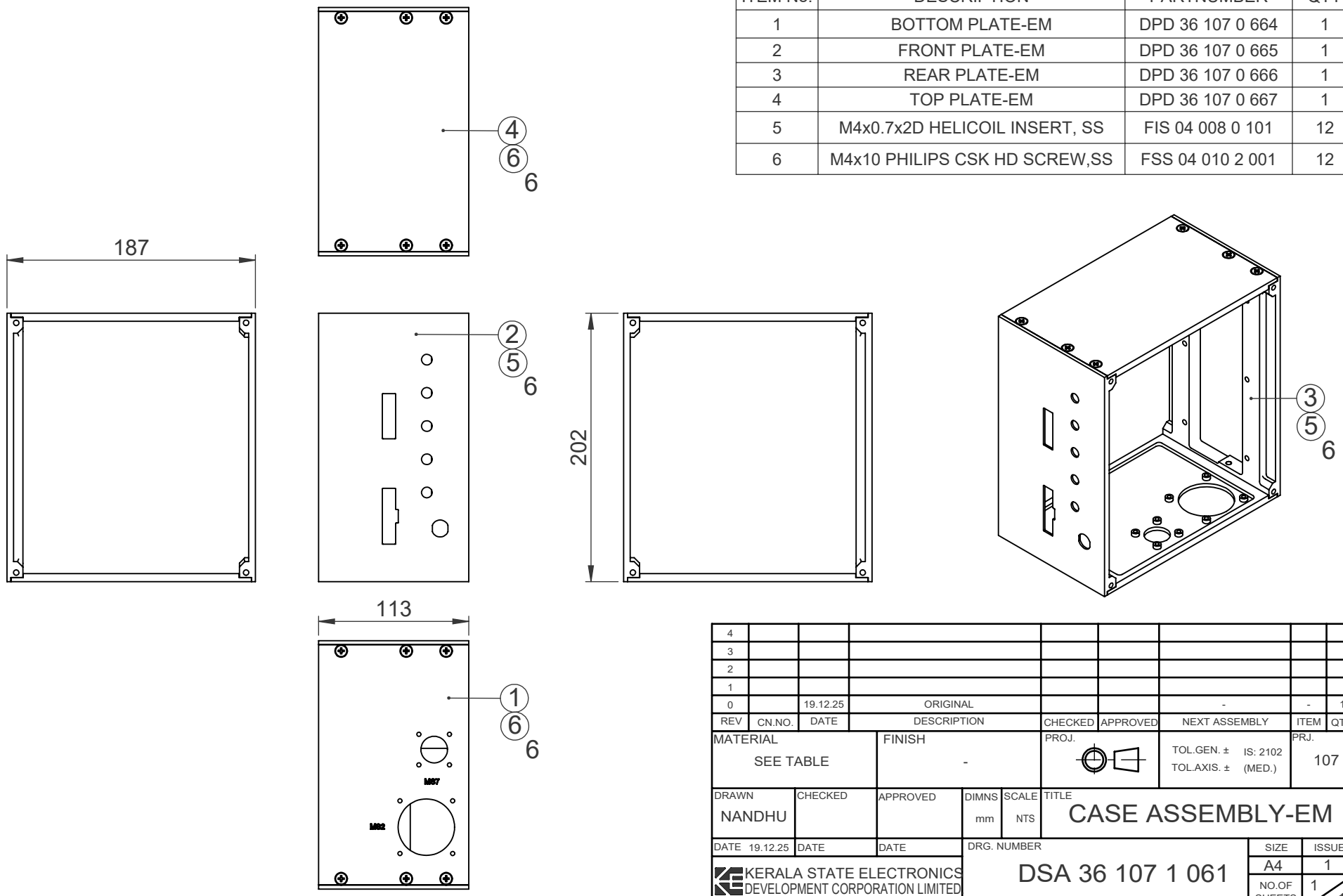

REV	CN.NO.	DATE	DESCRIPTION	CHECKED	APPROVED	NEXT ASSEMBLY	ITEM	QTY
4								
3								
2								
1								
0		19.12.25	ORIGINAL			-	-	1

MATERIAL: SEE TABLE	FINISH: -	PROJ.	TOL.GEN. ± / TOL.AXIS. ± IS: 2102 (MED.)	PRJ. 107	
DRAWN: NANDHU	CHECKED	APPROVED	DIMNS: mm	SCALE: NTS	TITLE: CASE ASSEMBLY-EM
DATE 19.12.25	DATE	DATE	DRG. NUMBER: DSA 36 107 1 061	SIZE: A4	ISSUE: 1
KERALA STATE ELECTRONICS DEVELOPMENT CORPORATION LIMITED				NO.OF SHEETS: 1 / 1	

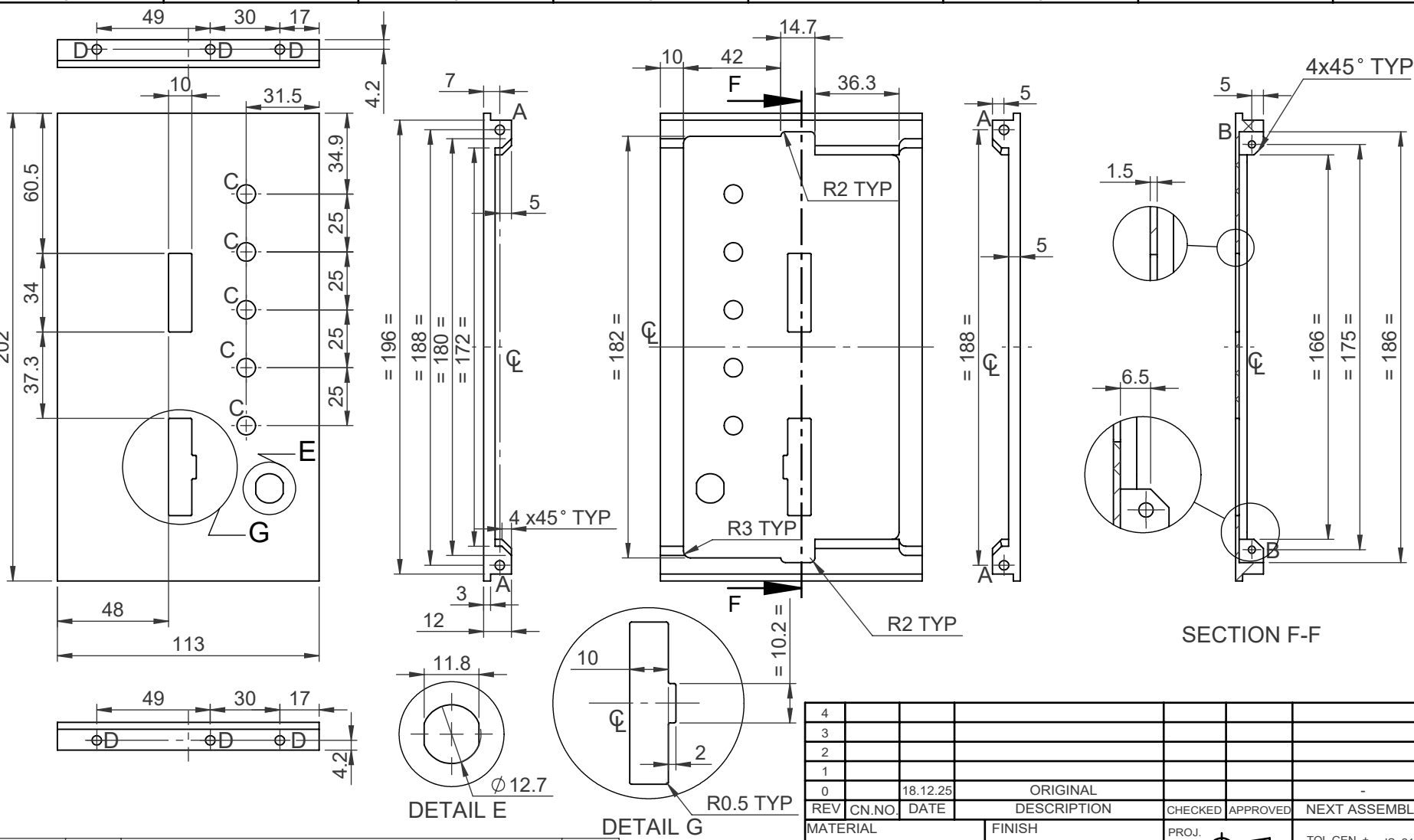

SL.No	REF	DESCRIPTION	QTY
1	A	DRILL ∅4.1x10↧ AND M4 HELICOIL TAP	4
2	B	DRILL ∅3.1x8↧ AND M3 HELICOIL TAP	2
3	C	∅8	5
4	D	DRILL ∅4.1 AND M4 HELICOIL TAP	6
5	E	SEE DETAIL "E"	1

REV	CN.NO	DATE	DESCRIPTION	CHECKED	APPROVED	NEXT ASSEMBLY	ITEM	QTY
4								
3								
2								
1								
0		18.12.25	ORIGINAL			-	-	1

MATERIAL: ALUMINIUM ALLOY 6082-T6 / HE30	FINISH: SEE NOTE	PROJ.	TOL.GEN. ± TOL.AXIS. ± IS: 2102 (MED.)	PRJ. 107	
DRAWN: LALU	CHECKED	APPROVED	DIMNS: mm	SCALE: NTS	TITLE: FRONT PLATE-EM
DATE 18.12.25	DATE	DATE	DRG. NUMBER: DPD 36 107 0 665	SIZE: A4	ISSUE: 1
KERALA STATE ELECTRONICS DEVELOPMENT CORPORATION LIMITED				NO.OF SHEETS: 1 / 2	

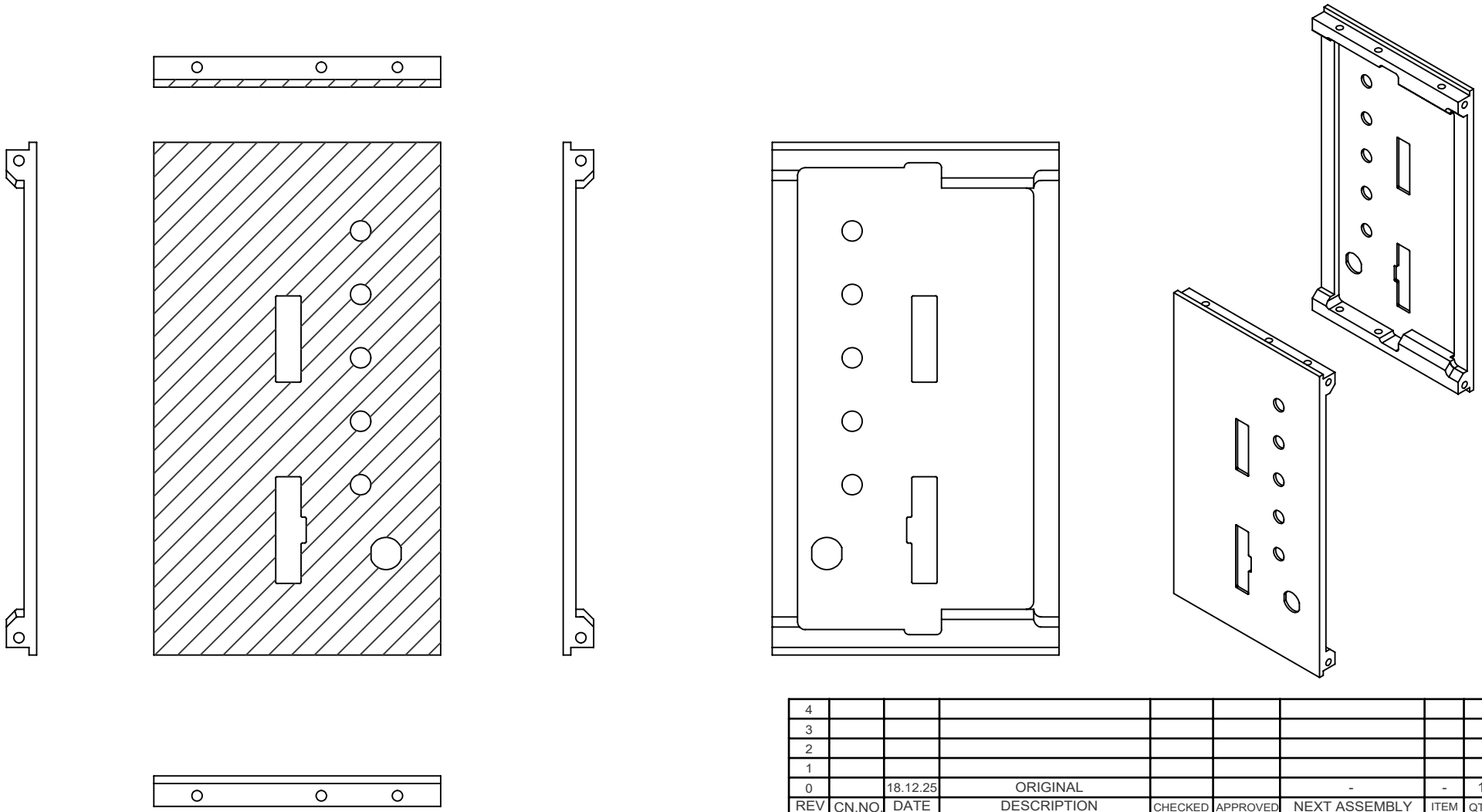

NOTE:

1. FINISH: D.A GREY POWDER COATING TO IS:5 SHADE No.632 WITH STRUCTURE FINISH AFTER YELLOW CC COATING.
2. POWDER COATING ONLY ON HATCHED AREA.
3. AVOID SHARP EDGES AND CORNERS

REV	CN.NO	DATE	DESCRIPTION	CHECKED	APPROVED	NEXT ASSEMBLY	ITEM	QTY
4								
3								
2								
1								
0		18.12.25	ORIGINAL			-	-	1

MATERIAL: ALUMINIUM ALLOY 6082-T6 / HE30	FINISH: SEE NOTE	PROJ.	TOL.GEN. ± TOL.AXIS. ± IS: 2102 (MED.)		PRJ. 107
DRAWN: LALU	CHECKED	APPROVED	DIMNS: mm	SCALE: NTS	TITLE: FRONT PLATE-EM
DATE 18.12.25	DATE	DATE	DRG. NUMBER: DPD 36 107 0 665	SIZE: A4	ISSUE: 1
KERALA STATE ELECTRONICS DEVELOPMENT CORPORATION LIMITED				NO.OF SHEETS: 2 / 2	

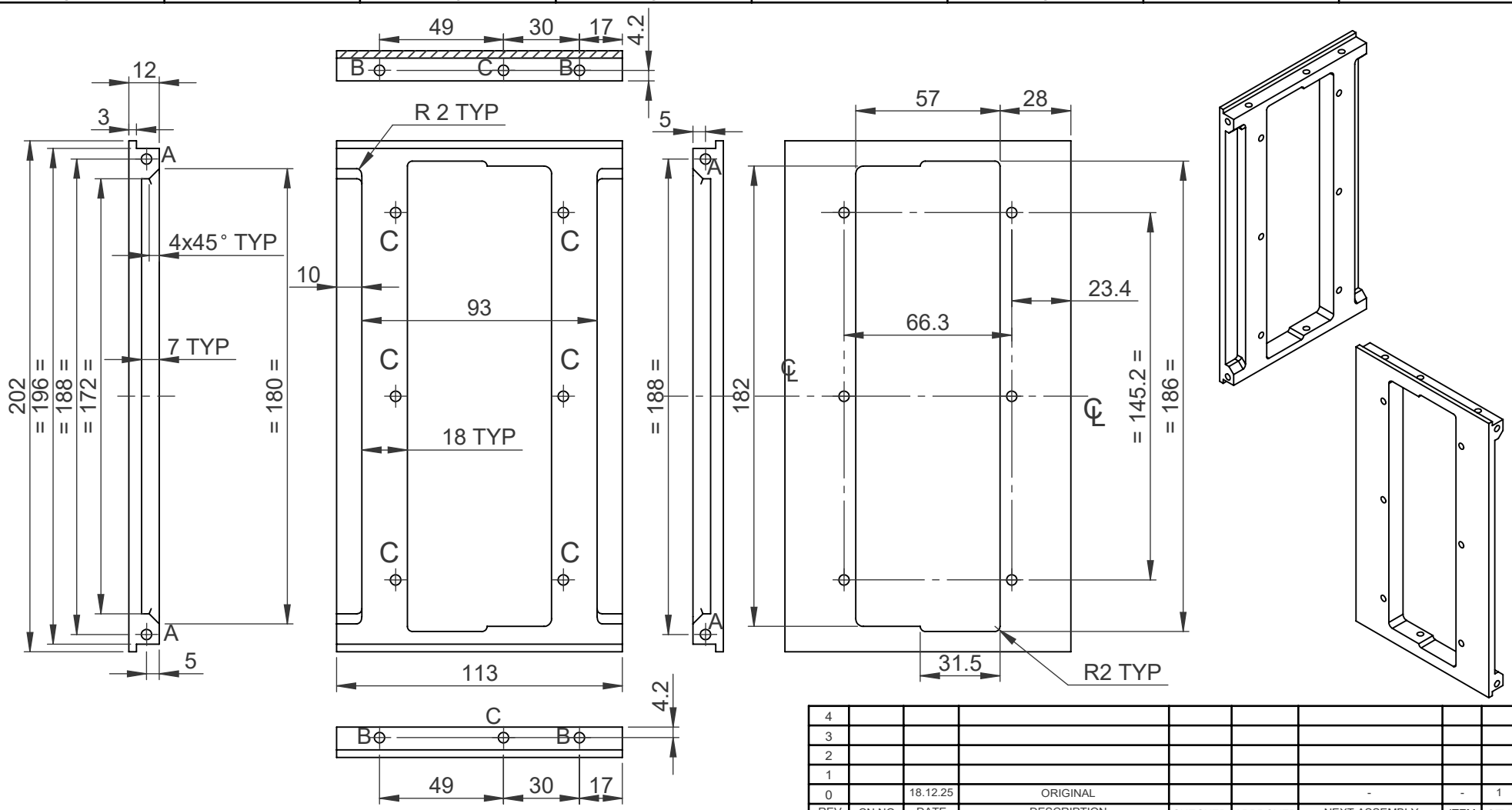

NOTE:

1. FINISH: D.A GREY POWDER COATING TO IS:5 SHADE No.632 WITH STRUCTURE FINISH AFTER YELLOW CC COATING.
2. POWDER COATING ONLY ON HATCHED AREA.
3. AVOID SHARP EDGES AND CORNERS

SL.No	REF	DESCRIPTION	QTY
1	A	DRILL ∅4.1x10↧ AND M4 HELICOIL TAP	4
2	B	DRILL ∅4.1x7↧ AND M4 HELICOIL TAP	4
3	C	DRILL ∅4.1 THROUGH AND M4 HELICOIL TAP	8

REV	CN.NO.	DATE	DESCRIPTION	CHECKED	APPROVED	NEXT ASSEMBLY	ITEM	QTY
4								
3								
2								
1								
0		18.12.25	ORIGINAL			-	-	1

MATERIAL: ALUMINIUM ALLOY 6082-T6 / HE30

FINISH: SEE NOTE

PROJ.

TOL.GEN. ± TOL.AXIS. ± IS: 2102 (MED.)

PRJ. 107

DRAWN: LALU | CHECKED | APPROVED | DIMNS: mm | SCALE: NTS

TITLE: REAR PLATE-EM

DATE 18.12.25 | DATE | DATE

KERALA STATE ELECTRONICS DEVELOPMENT CORPORATION LIMITED

DRG. NUMBER: DPD 36 107 0 666

SIZE: A4 | ISSUE: 1

NO.OF SHEETS: 1 / 1

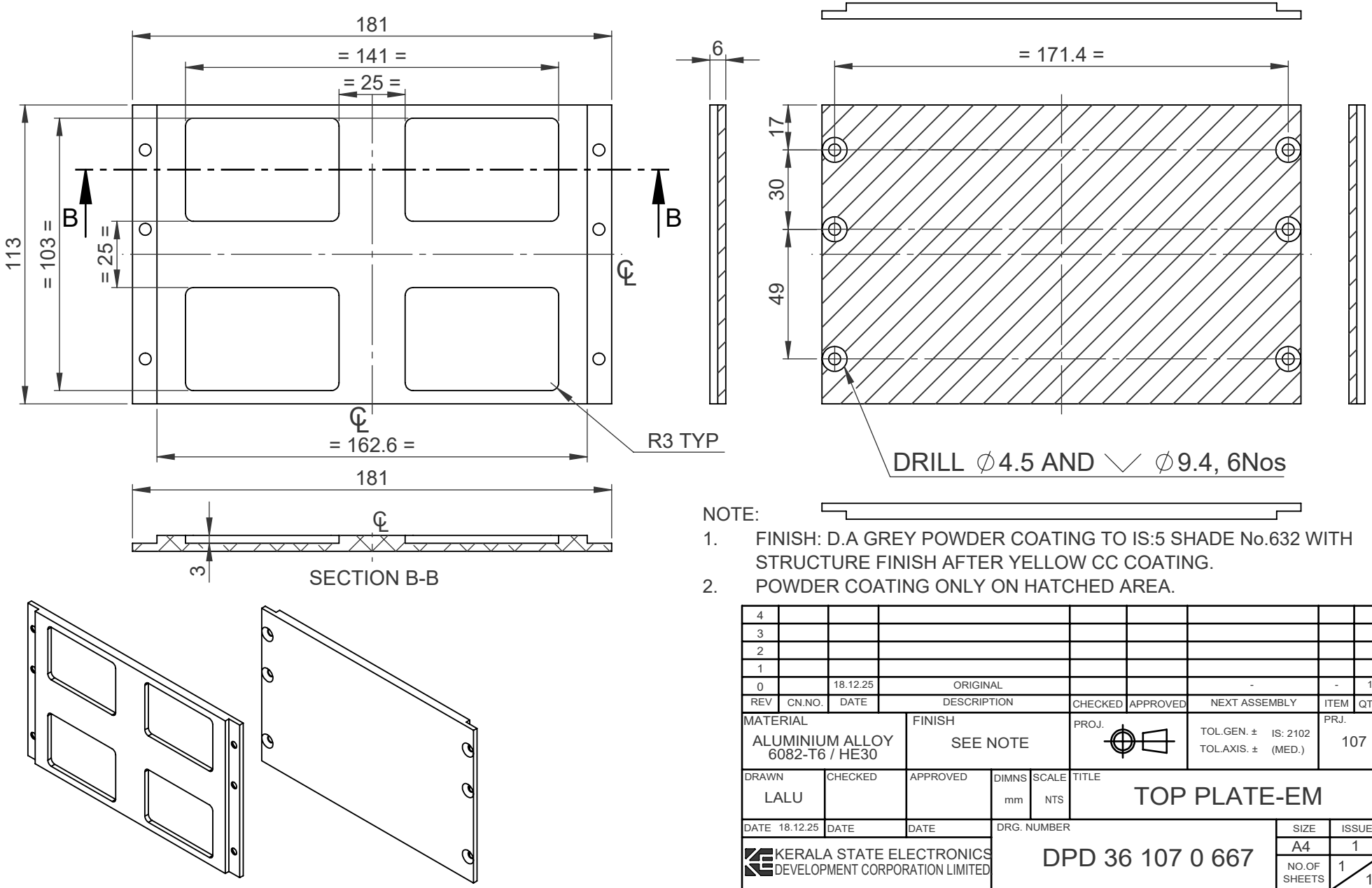

NOTE:

1. FINISH: D.A GREY POWDER COATING TO IS:5 SHADE No.632 WITH STRUCTURE FINISH AFTER YELLOW CC COATING.
2. POWDER COATING ONLY ON HATCHED AREA.

REV	CN.NO.	DATE	DESCRIPTION	CHECKED	APPROVED	NEXT ASSEMBLY	ITEM	QTY
4								
3								
2								
1								
0		18.12.25	ORIGINAL			-	-	1

MATERIAL	FINISH	PROJ.		PRJ.
ALUMINIUM ALLOY 6082-T6 / HE30	SEE NOTE		TOL.GEN. ± IS: 2102 TOL.AXIS. ± (MED.)	107

DRAWN	CHECKED	APPROVED	DIMNS	SCALE	TITLE
LALU			mm	NTS	TOP PLATE-EM
DATE 18.12.25	DATE	DATE			

KERALA STATE ELECTRONICS DEVELOPMENT CORPORATION LIMITED

DRG. NUMBER: DPD 36 107 0 667

SIZE	ISSUE
A4	1
NO.OF SHEETS	1 / 1